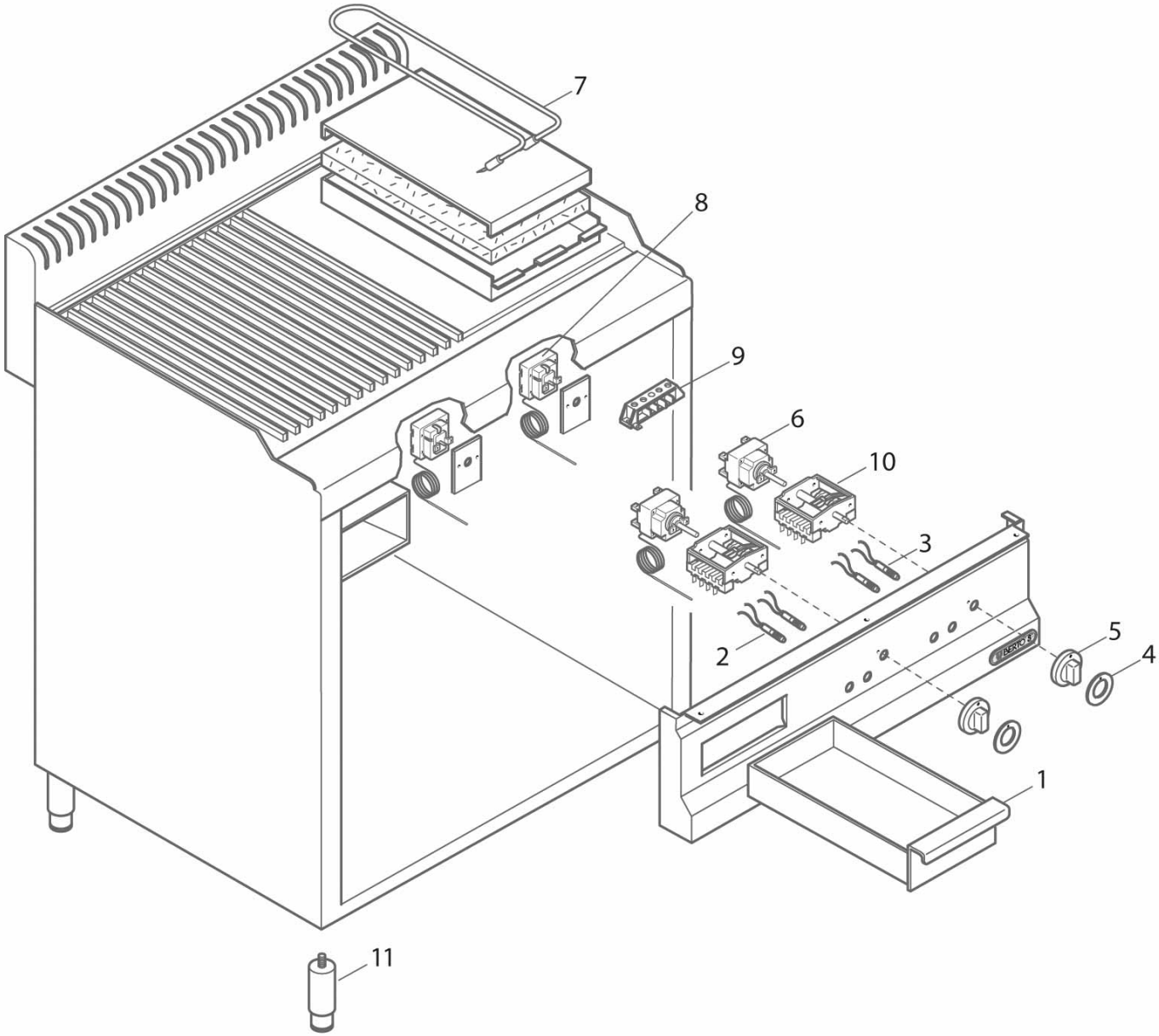
7
8
9
6
10
3
2
5
4
1
11

E6FR3MP

Pos. Item	Codice Code	Descrizione	Item Description	Designation articles	Artikelbeschreibung	Decripciòn artìculos	N° pezzi - No. pieces					
1	36791000	Ass. cassetto fry-top s.600	Drip tray fry-top s.600	Bac recueille sauces fry-top s	Sossen-auffangschale fry-top s	CajÓn-grasera fry-top s.600						1
2	30168500	Spia arancio 230v d.10mmt150Ø	Orange lamp 230v	Temoin lumineux orange 230v	Orange kontrollampe 230v	Piloto naranja 230v						1
3	30168800	Spia verde 230v d.10mmt150Ø	Green lamp 230v	Temoin lumineux vert 230v	Grune kontrollampe 230v	Piloto verde 230v						1
4	31953500	Serig.rossa manop.frytop/forno	Knob serigraphy	Serigraphie manette	Drehknopfserigraphie	Serigrafia mando						1
5	35877200	Manopola rossa p. 6x4.6 a o° r	Red knob p. 6x4.6 a o° ral3000	Manette rouge p. 6x4.6 a o° r	Drehknopf p. 6x4.6 a o° ral300	Mando rojo p. 6x4.6 a o° ral30						1
5	35876200	Manopola rossa p. 6x4.6 a o°	Red knob 6x4.6 o° c	Manette rouge 6x4.6 o° c	Drehknopf 6x4.6 o° c	Mando rojo 6x4.6 o° c						1
6	30064900	Termostato trif.270Ø x fe 2/1	Thermostat 270Ø - fe 2/1	Thermostat 270Ø - fe 2/1	Thermostat 270Ø - fe 2/1	Termostato 270Ø - fe 2/1						1
7	36039300	Resist.1350w240v fry-top s.600	1350w 240v heating element	RÉsistance 1350w240v	Widerstand 1350w240v	Resistencia 1350w240v						3
8	22069700	Termostato trif.sicur.fry-top	Security thermostat	Thermostat de surete	Sicherheitthermostat	Termostato de seguridad						1
9	30184200	Morsettiera a 6 poli fv 122 b	Terminal board 6 poles	Bornier 6 poles	Klemmenleiste	Bornera 6 polos						1
10	22050300	Interr. quadrip. fry-top/700;	Switch	Interrupteur	Schalter	Interruptor						1
11	24684200	Piedino inox 1 1/2 h-125/175	Foot 1 1/2 h-125/175	Pied 1 1/2 h-125/175	Fuss 1 1/2 h-125/175	Pata 1 1/2 h-125/175						4